Thin-Film-Transistor LCD Module
Model: GWTS80MNFG1E0

Acceptance

Solomon Goldentek Display Corp.

NO. 18 Ta-Yeh St., Ta-Fa Industrial Park,Ta-Liao Hsiang, Kaohsiung Hsien 831, TAIWAN , R.O.C.

FAX: 886-7-7886800

Approved and Checked by

Approved by	Checked by		Made by
SGD 2016.09.01 楊榮哲			SGD 2016.09.01 吳英隆

Revise Records

Rev.	Date	Contents	Written	Approved
A	2015/08/26	Preliminary Specification	Alex	Roger
B	2016/8/11	Modify the Led left Time 40000 hr➔50000 hr	Alex	Roger
		Add the FPC Dimension		
		Modify the interface pin32~36		
C	2016/9/1	Modify the Dimensional Outlines	Alex	Roger

Special Notes

Note1.	
Note2.	
Note3.	
Note4.	
Note5.	

Contents

1. General Description and Features 4
1.1 LCD Module 4
2. Mechanical Information 4
3. Electrical Specifications 5
3.2 Signal Timing Specifications 8
4. Optical Characteristics 12
4.1 Optical characteristic of the LCD 12
5. I/O Terminal 15
5.1 Pin Assignment 15
5.2 Block Diagram 17
6. Displayed Color and Input Data 18
7. Reliability Condition 19
8. Dimensional Outlines 20
9. Incoming Inspection Standards 21

1. General Description and Features

GWTS80MNFG1E0 is a transmissive type color active matrix TFT (Thin Film Transistor) liquid crystal display (LCD) that uses amorphous silicon TFT as a switching device. This model is composed of a TFT-LCD module, back-light unit. Graphics and texts can be displayed with 1600 (W) x RGB x 480 (H) dots with 16.7M colors. The following table described the features of GWTS80MNFG1E0.

1.1 LCD Module

No.	Item	Specification	Unit
1	Panel Size	8.0”	Inch
2	Number of Pixels	1600 (W) x RGB x 480 (H)	Pixels
3	Active Area	194.40.00 (W) × 58.32 (H)	mm
4	Pixel Pitch	0.4050 (W) x 1.2150(H)	μm
5	Outline Dimension	208.00 (W) × 73.00 (H) × 5.40 (T)	mm
6	Number of Colors	16.7M (8bits)	- -
7	Display Mode	Normal Black	- -
8	View Direction	IPS Full View Angle	- -
9	Display Format	Pixels RGB stripe arrangement	- -
10	Surface Treatment	C/F Polarizer: HC, TFT Polarizer: Clear	- -
11	Contrast Ratio	900 (Typ.)	- -
12	Luminance (cd/m^2)	500 (typical)	cd/m2
13	Interface	LVDS 40pins Interface	- -
14	Backlight	White LED	- -
15	Driver IC	NIL	- -
16	Operation Temperature	-20 ~ 70	°C
17	Storage Temperature	-30 ~ 80	°C
18	Weight	N/A	g

2. Mechanical Information

Item		Min.	Typ.	Max.	Unit	Note
Module Size	Horizontal (H)	207.7	208.00	208.30	mm	
	Vertical (V)	72.7	73.00	73.3	mm	
	Thickness (T)	5.1	5.40	5.7	mm	(1)
Weight		--	--	--	g	--

Note (1) Not Include Component. Refer to the Outline Dimension Drawing as attached.

3. Electrical Specifications

3.1.1 Electrical Absolute Maximum Ratings

Item	Symbol	Values		Unit	Note
		Min	Max.		
Power supply voltage	VDD	2.8	3.5	V	Note

Notes : Permanent damage to the device may occur if maximum values are exceeded functional operation should be restricted to the condition described under normal operating conditions.

3.1.1.1 TFT-LCD Module

Parameter	Symbol	Value			Unit	Remarks
		Min.	Typ.	Max.		
Digital Voltage	VDD	3.0	3.3	3.6	V	
Power for Driver IC & GMA	VSDP	TBD	5.5	TBD	V	
Power for Driver IC & GMA	VSDN	TBD	-5.5	TBD	V	

3.1.1.2 Backlight Unit

3.2 Backlight Unit

Item	Symbol	Values			Unit	Remark
		Min	Typ	Max.		
LED Voltage	VF	--	25.6	--	V	IF=75mA 24LEDs
B/L Average luminous Intensity	LCD	(450)	(500)	--	Cd/m2	
Luminous Tolerance	Iv-m	75	--	--	%	(mix/max)*100
LED life time	Hr	50,000	—	—	Hour	Note (1),(2)

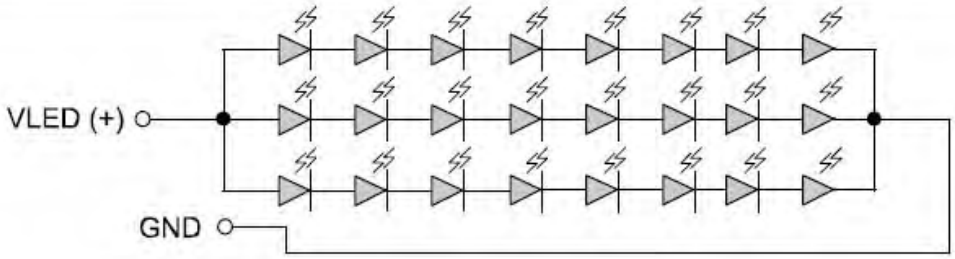

LED Light Bar Circuit

Note (1) LED life time (Hr) can be defined as the time in which it continues to operate under the condition: Ta=25±3°C, typical IL value indicated in the above table until the brightness becomes less than 50%.

Note (2) The "LED life time" is defined as the module brightness decrease to 50% original brightness at Ta=25°C and IL=75mA. The LED lifetime could be decreased if operating IL is larger than 75mA. The constant current driving method is suggested.

3.1.2 DC Electrical Characteristics of the TFT LCD

Parameter		Symbol	Value			Unit	Note
			Min.	Typ.	Max.		
Power Supply Input Voltage		VDD	TBD	3.3	TBD	Vdc	
Power Supply Ripple Voltage		VRP	TBD	TBD	TBD	mV	
Power Consumption		PDD	TBD	TBD	TBD	Watt	1,2
Rush current		IRUSH	-	-	1	A	
LVDS Inter-face	Differential Input High Threshold Voltage	VLVTH	100		300	mV	
	Differential Input Low Threshold Voltage	VLVTL	-300		-100	mV	
	Common Input Voltage	VLVC	1	1.2	1.7-|Vid|/2	V	
	Differential input voltage	|Vid|	0.2	-	0.6		
CMOS Inter-face	Input High Threshold Voltage	VIH	2.6	-	3.3	V	
	Input Low Threshold Voltage	VIL	0	-	0.8	V	

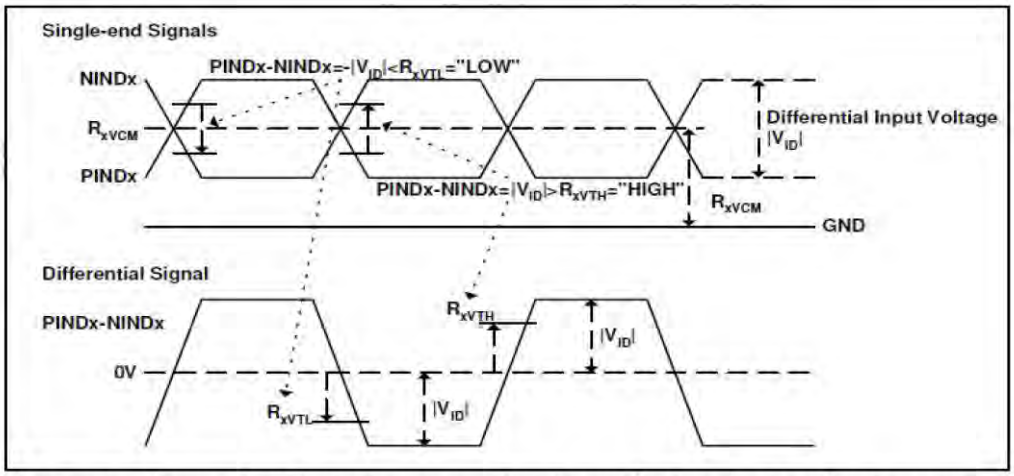

Notes : 1. The supply voltage is measured and specified at the interface connector of LCM. The current draw and power consumption specified is for VDD=3.3V, Frame rate fV=60Hz and Clock frequency = 41.56MHz. Test Pattern of power supply current is Black.

Notes: 2. The duration of rush current is about 2ms and rising time of Power Input is 1ms(min)

3.2 Signal Timing Specifications

3.2.1 Timing Parameters (Sync mode)

Parameter	Symbol	Value			Unit.	Note
		Min.	Typ.	Max.		
DCLK Frequency	FDCLK	48.69	52.59	60.83	MHz	
Horizontal valid data	thd		1600		DCLK	
Hsync Pulse Width	thpw	1	2	140	DCLK	
Hsync back porch	thbp	5	16	141	DCLK	
Hsync front porch	thfp	19	44	155	DCLK	
1 Horizontal Line	th	1656	1660	1760	DCLK	
Vertical valid data	tvd		480		H	
Vsync Pulse Width	tvpw	1	2	90	H	
Vsync back porch	tvbp	5	5	91	H	
Vsync front porch	tvfp	5	43	91	H	
1 Vertical field	tv	490	528	576	H	

Notes: This product is Sync mode

8-bit LVDS input (HSD='L')

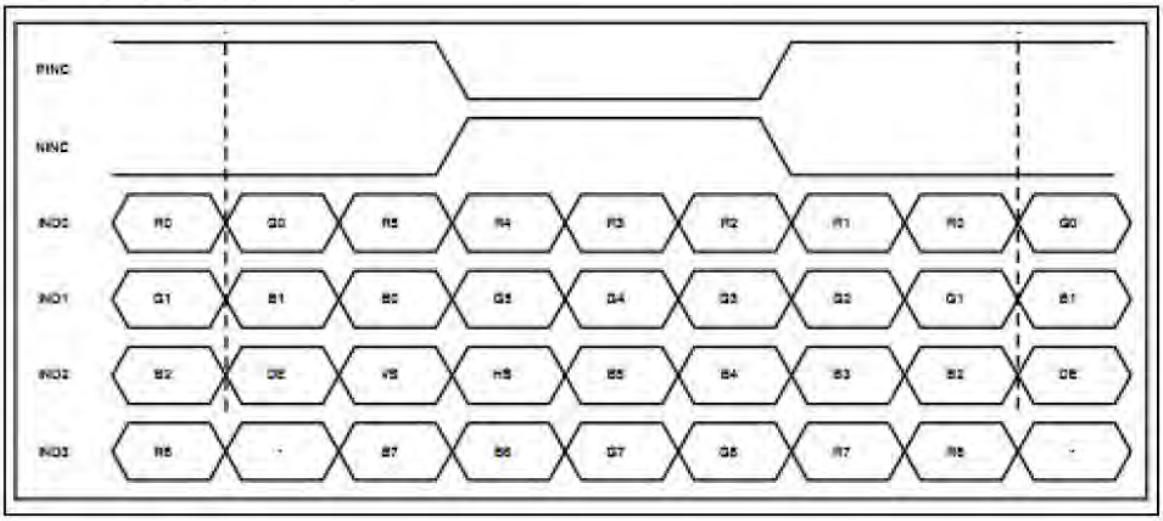

Vertical input timing

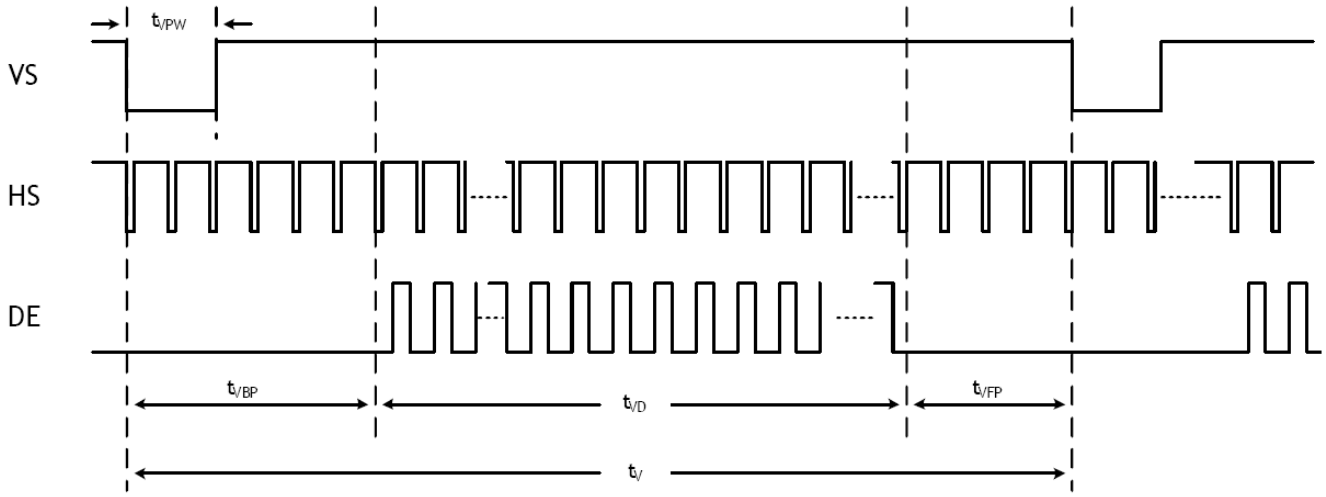

Horizontal input timing

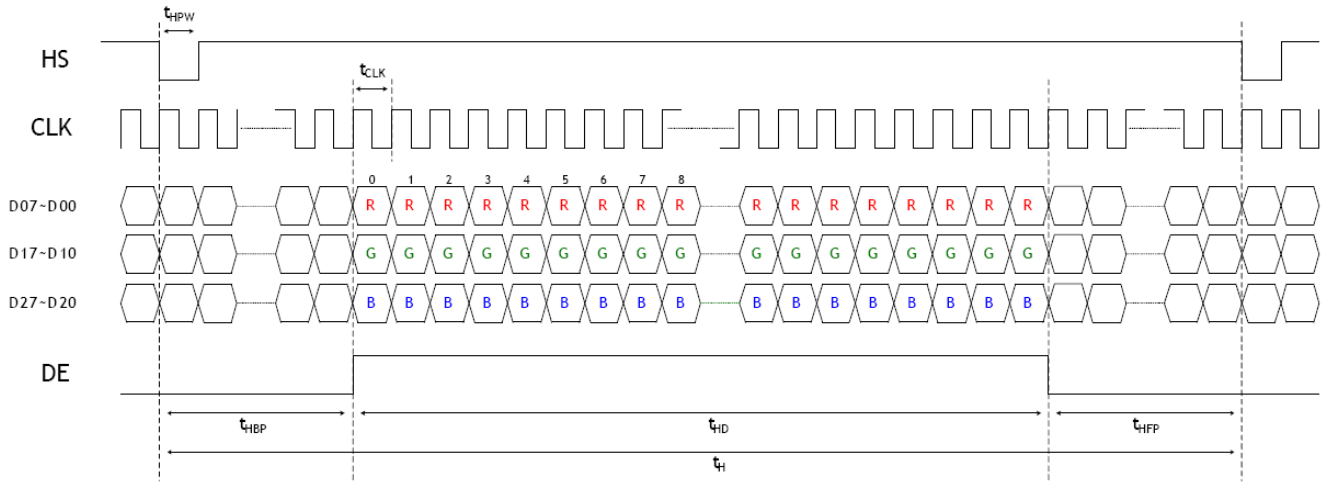

3.2.2 LVDS Rx Interface Timing Parameter

Parameter	Symbol	Value			Unit.	Condition
		Min.	Typ.	Max.		
Clock frequency	RxFCLK	TBD	TBD	TBD	MHz	
Input data skew margin	TRSKM	500	-	-	ps	|VID|=400mV, RxVCM=1.2V, RxFCLK=71MHz
Clock high time	TLVCH	-	4/(7*RxFCLK)	-	ns	
Clock low time	TLVCL	-	3/(7*RxFCLK)	-	ns	
PLL wake-up time	TenPLL	-	-	150	us	

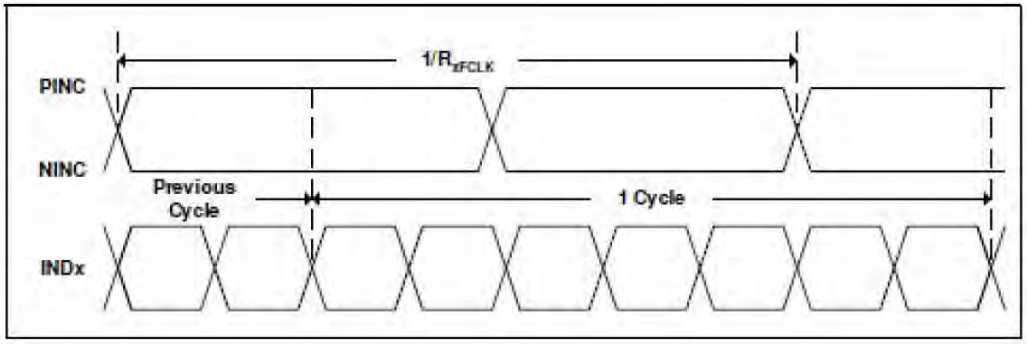

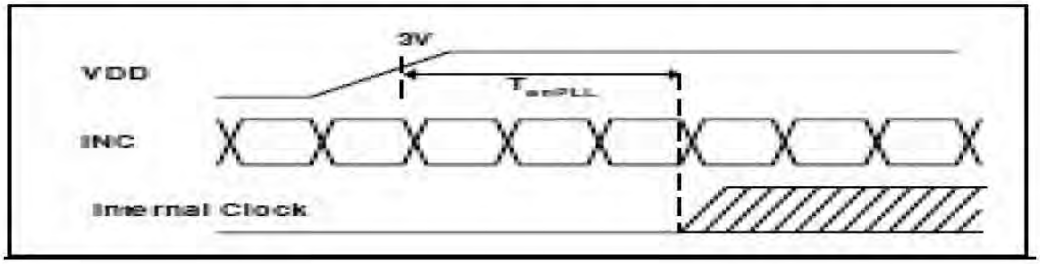

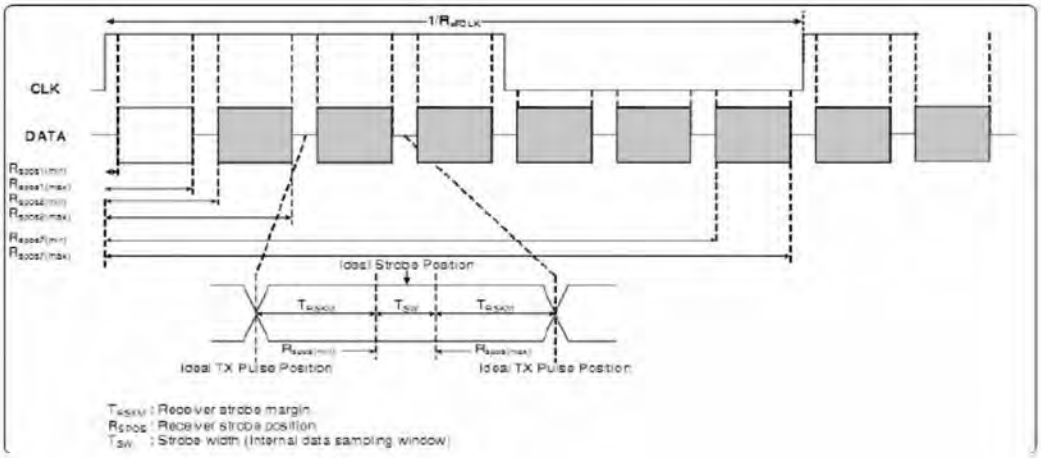

3.2.3 Power On/Off Sequence

Power on

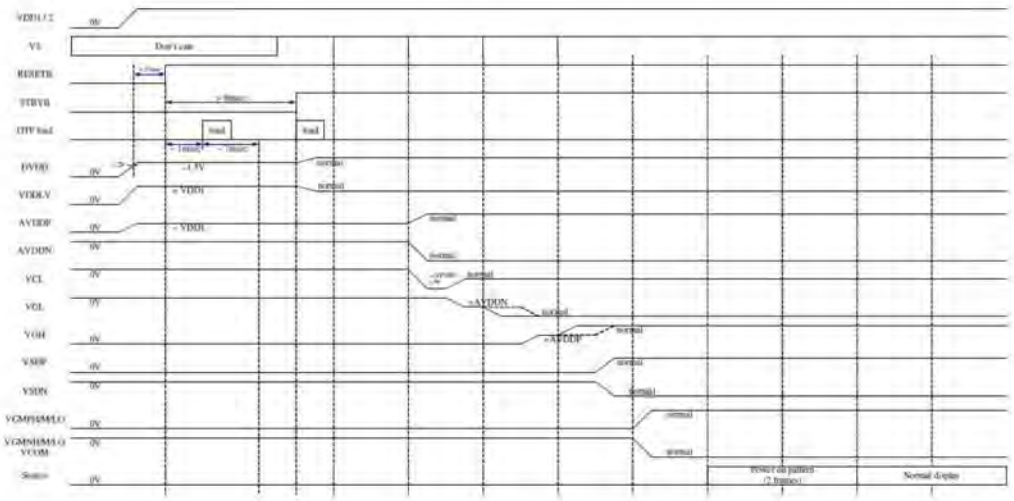

Notes:

1. When the power supply VDD is 0V, keep the level of input signals on the low or keep high impedance.
2. Do not keep the interface signal high impedance when power is on. Back Light must be turn on after power for logic and interface signal are valid.

Power off

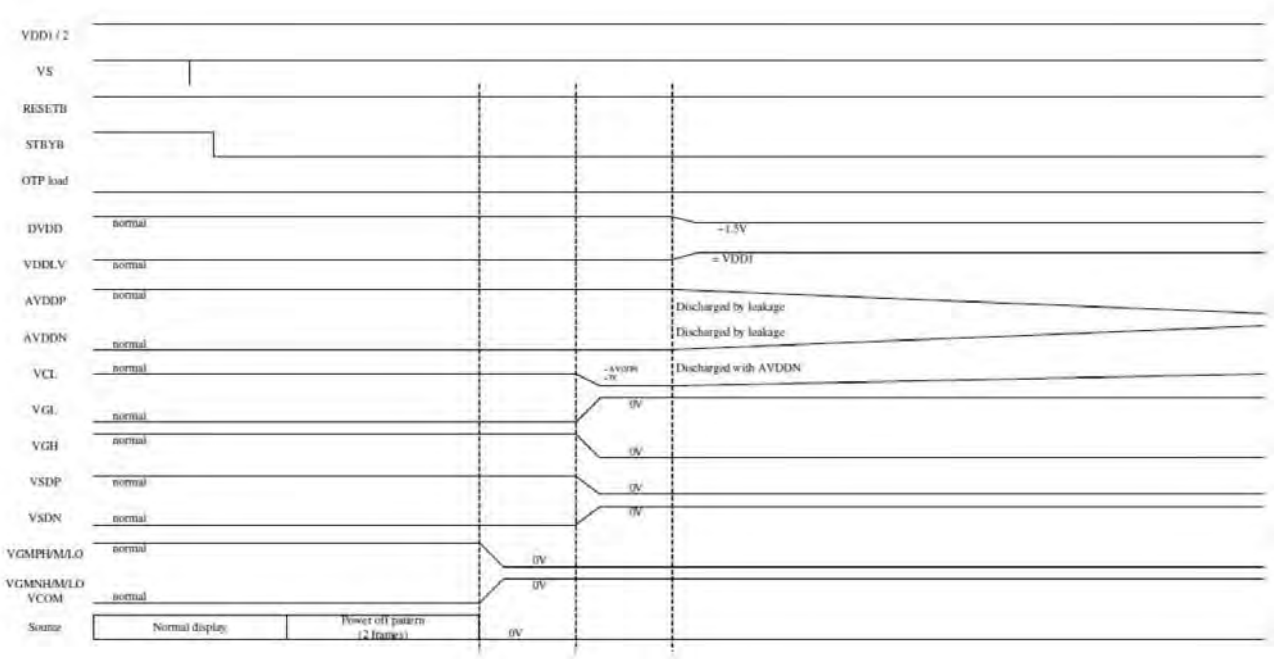

4. Optical Characteristics

4.1 Optical characteristic of the LCD

Item		Symbol	Condition	Min.	Typ.	Max.	Unit
Brightness		--	Note1, Note 3, ($\theta = 0^\circ$, Normal Viewing Angle)	450	500	--	cd/m2
Uniformity		B-uni		75	--	--	%
Contrast Ratio		CR		700	900	--	--
Response Time		Tr+ Tf		--	25	35	ms
Transmittance		Trans.		4.6%	5.1%	5.6%	
Color Gamut		--		45	50	--	NTSC
Color Chromaticity	White	Wx		0.301	0.304	0.307	--
		Wy		0.333	0.336	0.339	--
View Angle	Horizontal	$\theta x+$	Center CR≥10	--	85	--	--
		$\theta x-$		--	85	--	--
	Vertical	$\theta Y+$		--	85	--	--
		$\theta Y-$		--	85	--	--
Image sticking		tis	2 hours	--	--	2	Sec
Gamma Scale		--	--	--	2.2	--	--

Note：The following optical specifications shall be measured in a darkroom or equivalent state (ambient luminance ≤1 lux, and at room temperature). The operation temperature is 25°C ± 2°C. The measurement method is shown in Note1.

Note1: The method of optical measurement:

a. Test equipment setup

After stabilizing and leaving the panel alone shall be warmed up for the stable operation of LCM, the measurement should be executed. Measurement should be executed in a stable, windless, and dark room. Optical specifications are measured by Topcon BM-7(fast) with a viewing angle of 2° at a distance of 50cm and normal direction.

b. Definition of response time: Tr and Tf

The response time is defined as the following figure and shall be measured by switching the input signal for “black” and “white”.

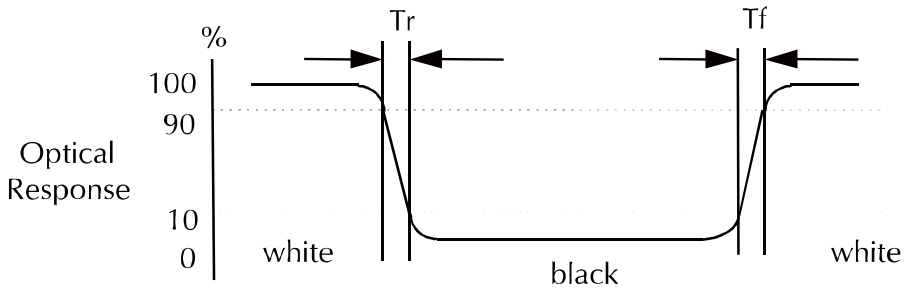

c. Definition of contrast ratio:

$$\text{Contrast Ratio (CR)} = \frac{\text{Brightness measured when LCD is at “white state”}}{\text{Brightness measured when LCD is at “black state”}}$$

d. Measured at the center area of the panel when all the input terminals of LCD panel are electrically opened.

e. View Angle

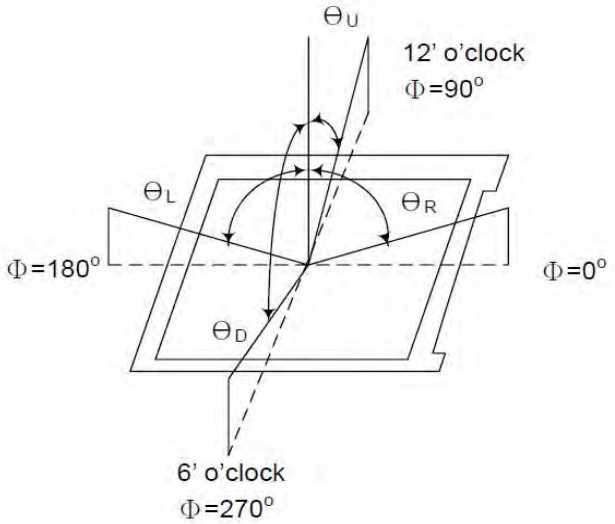

f. Definition of Luminance of White: Luminance of white at the center points

Light Source of Back-Light Unit	LED Type

g. Definition of White Uniformity

$$\text{White Uniformity} = \frac{\text{Min. luminance of white among 9-points}}{\text{Max. luminance of white among 9-points}} \times 100\%$$

5. I/O Terminal

5.1 Pin Assignment

Pin No.	Symbol	I/O	Function	Remark
1	STBYB	I	Enable IC	Note 2
2	Reset	I	Reset IC	
3	VDD	P	Digital power_3.3V	+3.3V@50mA MAX
4	VDD	P	Digital power_3.3V	
5	SELB	I	6bit/8bit mode select	Note 4
6	GND	P	Ground	- -
7	GND	P	Ground	- -
8	RXIN0-	I	Negative LVDS differential data input	PAD on bottom & pin 1on, right (top view) ,LVDS pair will not cross each other.
9	RXIN0+	I	Positive LVDS differential data input	- -
10	GND	P	Ground	- -
11	RXIN1-	I	Negative LVDS differential data input	- -
12	RXIN1+	I	Positive LVDS differential data input	- -
13	GND	P	Ground	- -
14	RXCLKIN-	I	Negative LVDS differential data input	- -
15	RXCLKIN+	I	Positive LVDS differential data input	- -
16	GND	P	Ground	- -
17	RXIN2-	I	Negative LVDS differential clock input	- -
18	RXIN2+	I	Positive LVDS differential clock input	
19	GND	P	Ground	- -
20	RXIN3-	I	Negative LVDS differential data input	- -
21	RXIN3+	I	Positive LVDS differential data input	- -
22	GND	P	Ground	
23	VSDN	P	Power for Driver IC	-5.5V@80mA MAX
24	VSDN	P	Power for Driver IC	
25	VSDN	P	Power for Driver IC	
26	VSDP	P	Power for Driver IC	+5.5V@80mA MAX
27	VSDP	P	Power for Driver IC	
28	VSDP	P	Power for Driver IC	
29	GND	P	Ground	
30	RL	I	Horizontal shift direction	Note 5

31	TB	I	Vertical shift direction	Note 5
32	N/C	--	No Connection	
33	N/C	--	No Connection	
34	N/C	--	No Connection	
35	N/C	--	No Connection	
36	N/C	--	No Connection	
37	LED-	P	LED cathode	
38	LED-	P	LED cathode	
39	LED+	P	LED Anode	
40	LED+	P	LED Anode	

Note.1

I/O definition : I---Input ; O---Output ; P---Power/Ground

Note.2

STBYB="H (3.3V)": normal operation ; STBYB="L (GND)": timing controller, source driver will turn off, all output are High-Z

Note.3

Suggest to connection with an RC reset circuit for stability , Normally pull high. (47kΩ + 0.1uF or external MCU control)

Note.4

If LVDS input data is 8 bits，SELB must be set to High

Note.5

Scan Control Input		Scanning direction
RL	TB	
VDD	VDD	Up to Down, Left to Right
GND	VDD	Up to Down, Right to Left
VDD	GND	Down to Up, Left to Right
GND	GND	Down to Up, Right to Left

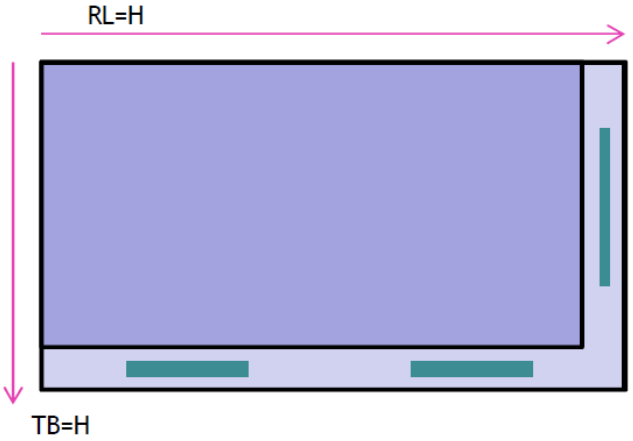

5.2 Block Diagram

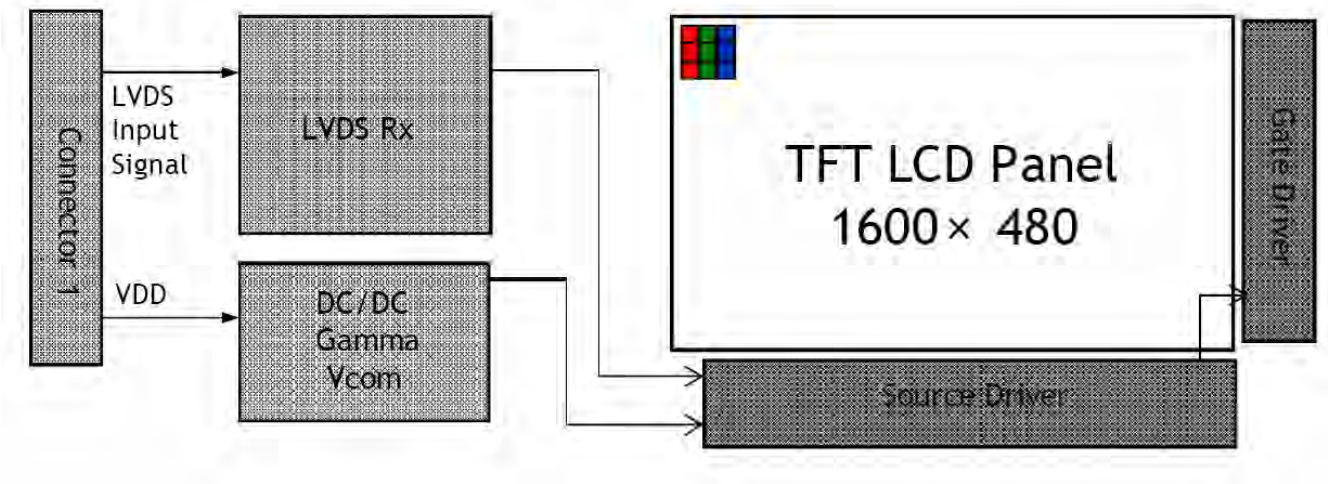

6. Displayed Color and Input Data

Color & Gray Scale		Input Data Signal																							
		Red Data								Green Data								Blue Data							
		R7	R6	R5	R4	R3	R2	R1	R0	G7	G6	G5	G4	G3	G2	G1	G0	B7	B6	B5	B4	B3	B2	B1	B0
Basic Colors	Black	0	0	0	0	0	0	0	0	0	0	0	0	0	0	0	0	0	0	0	0	0	0	0	0
	Blue	0	0	0	0	0	0	0	0	0	0	0	0	0	0	0	0	1	1	1	1	1	1	1	1
	Green	0	0	0	0	0	0	0	0	1	1	1	1	1	1	1	1	0	0	0	0	0	0	0	0
	Cyan	0	0	0	0	0	0	0	0	1	1	1	1	1	1	1	1	1	1	1	1	1	1	1	1
	Red	1	1	1	1	1	1	1	1	0	0	0	0	0	0	0	0	0	0	0	0	0	0	0	0
	Magenta	1	1	1	1	1	1	1	1	0	0	0	0	0	0	0	0	1	1	1	1	1	1	1	1
	Yellow	1	1	1	1	1	1	1	1	1	1	1	1	1	1	1	1	0	0	0	0	0	0	0	0
	White	1	1	1	1	1	1	1	1	1	1	1	1	1	1	1	1	1	1	1	1	1	1	1	1
Gray Scale of Red	Black	0	0	0	0	0	0	0	0	0	0	0	0	0	0	0	0	0	0	0	0	0	0	0	0
	△	0	0	0	0	0	0	0	1	0	0	0	0	0	0	0	0	0	0	0	0	0	0	0	0
	Darker	0	0	0	0	0	0	1	0	0	0	0	0	0	0	0	0	0	0	0	0	0	0	0	0
	△	↑								↑								↑							
	▽	↓								↓								↓							
	Brighter	1	1	1	1	1	1	0	1	0	0	0	0	0	0	0	0	0	0	0	0	0	0	0	0
	▽	1	1	1	1	1	1	1	0	0	0	0	0	0	0	0	0	0	0	0	0	0	0	0	0
	Red	1	1	1	1	1	1	1	1	0	0	0	0	0	0	0	0	0	0	0	0	0	0	0	0
Gray Scale of Green	Black	0	0	0	0	0	0	0	0	0	0	0	0	0	0	0	0	0	0	0	0	0	0	0	0
	△	0	0	0	0	0	0	0	0	0	0	0	0	0	0	0	1	0	0	0	0	0	0	0	0
	Darker	0	0	0	0	0	0	0	0	0	0	0	0	0	0	1	0	0	0	0	0	0	0	0	0
	△	↑								↑								↑							
	▽	↓								↓								↓							
	Brighter	0	0	0	0	0	0	0	0	1	1	1	1	1	1	0	1	0	0	0	0	0	0	0	0
	▽	0	0	0	0	0	0	0	0	1	1	1	1	1	1	1	0	0	0	0	0	0	0	0	0
	Green	0	0	0	0	0	0	0	0	1	1	1	1	1	1	1	1	0	0	0	0	0	0	0	0
Gray Scale of Blue	Black	0	0	0	0	0	0	0	0	0	0	0	0	0	0	0	0	0	0	0	0	0	0	0	0
	△	0	0	0	0	0	0	0	0	0	0	0	0	0	0	0	0	0	0	0	0	0	0	0	1
	Darker	0	0	0	0	0	0	0	0	0	0	0	0	0	0	0	0	0	0	0	0	0	0	1	0
	△	↑								↑								↑							
	▽	↓								↓								↓							
	Brighter	0	0	0	0	0	0	0	0	0	0	0	0	0	0	0	0	1	1	1	1	1	1	0	1
	▽	0	0	0	0	0	0	0	0	0	0	0	0	0	0	0	0	1	1	1	1	1	1	1	0
	Blue	0	0	0	0	0	0	0	0	0	0	0	0	0	0	0	0	1	1	1	1	1	1	1	1
Gray Scale of White	Black	0	0	0	0	0	0	0	0	0	0	0	0	0	0	0	0	0	0	0	0	0	0	0	0
	△	0	0	0	0	0	0	0	1	0	0	0	0	0	0	0	1	0	0	0	0	0	0	0	1
	Darker	0	0	0	0	0	0	1	0	0	0	0	0	0	0	1	0	0	0	0	0	0	0	1	0
	△	↑								↑								↑							
	▽	↓								↓								↓							
	Brighter	1	1	1	1	1	1	0	1	1	1	1	1	1	1	0	1	1	1	1	1	1	1	0	1
	▽	1	1	1	1	1	1	1	0	1	1	1	1	1	1	1	0	1	1	1	1	1	1	1	0
	White	1	1	1	1	1	1	1	1	1	1	1	1	1	1	1	1	1	1	1	1	1	1	1	1

7. Reliability Condition

Test Condition

Temperature and Humidity(Ambient Temperature)
Temperature : 25 ± 5°C
Humidity : 65 ± 5%
Operation
Unless specified otherwise, test will be conducted under function state.
Container
Unless specified otherwise, vibration test will be conducted to the product itself without putting it in a container.
Test Frequency
In case of related to deterioration such as shock test. It will be conducted only once.

No.	Item	Condition Criterion
1	High Temperature Storage	80 °C, 120 hrs
2	Low Temperature Storage	-30 °C, 120 hrs
3	High Temperature Operating	70 °C, 120 hrs
4	Low Temperature Operating	-20 °C, 120 hrs
5	High Temperature/Humidity Non-Operating	60 °C, 90%RH, 120 hrs
6	Temperature Shock Non-Operating	-30 °C ←→ 80 °C, (0.5hr each), 25 cycles
7	Vibration Test Non-Operating	Frequency:0 ~ 55 Hz Amplitude:1.5 mm Sweep Time:11min Test Period:6 Cycles for each Direction of X,Y,Z
9	Electro-static Discharge Non-Operating	150pF,330Ω Air: ±12KV; Contact: ±6KV 10 times/point;4 points/panel face

9.3 Judgment Standard

The judgment of the above test should be made as follow:

Pass: Normal display image with no obvious non-uniformity and no line defect.
Partial transformation of the module parts should be ignored.

Fail: No display image, obvious non-uniformity, or line defects.

8. Dimensional Outlines

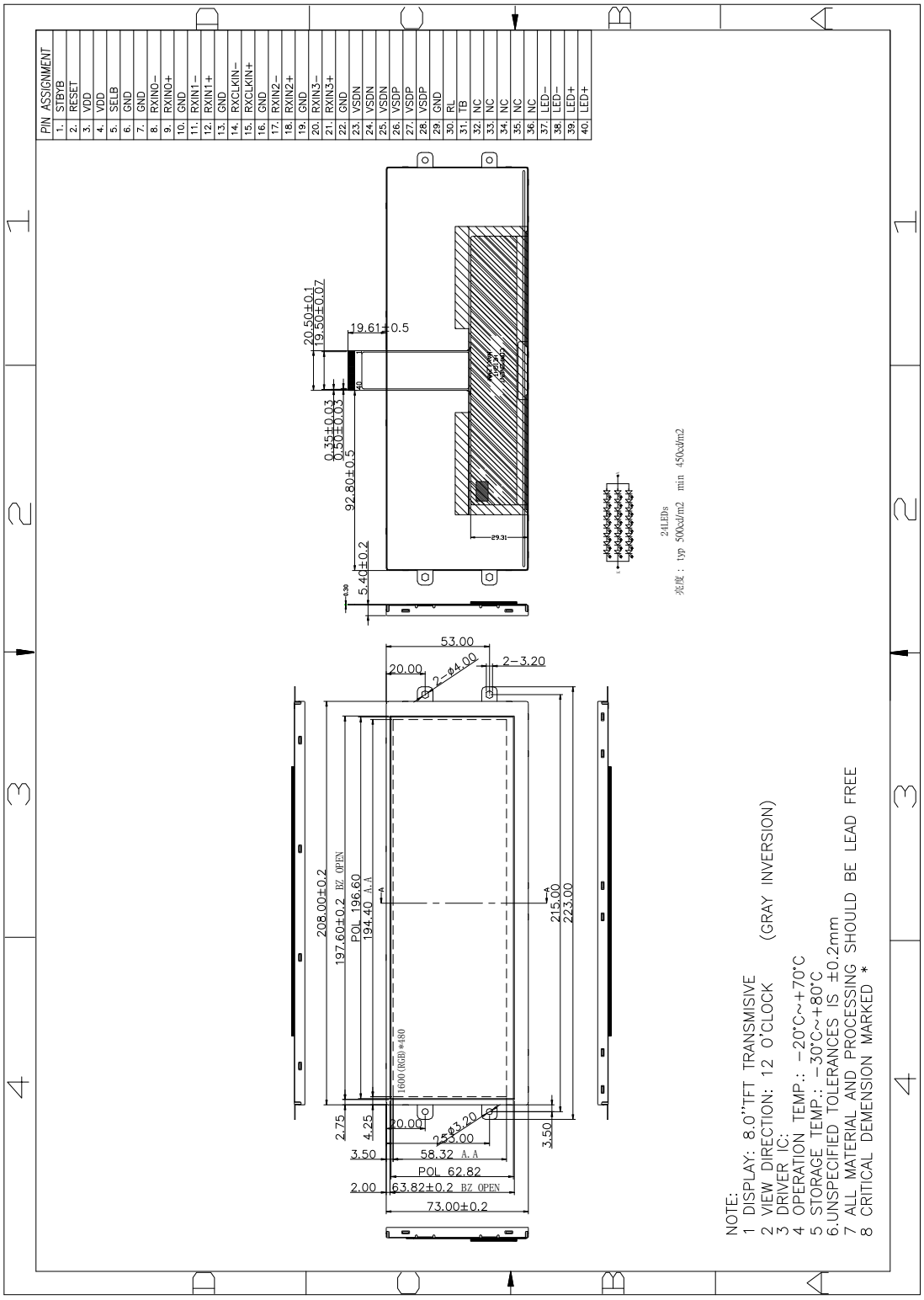

9. Incoming Inspection Standards

9.1 Inspection and Environment Conditions

9.1.1 Inspection Conditions:

No. 1 — Parameter: Operating

Display function: No Display malfunction (Major)

Contrast ratio (Black, White):
Does not meet specified range in the spec. (Major) (Note:3)

Line Defect: No obvious Vertical and Horizontal line defect in bright, dark and colored. (Major) (Note:1)

Point Defect (Red, green, blue, dark): Active area ≤ 5 dots (Minor) (Note:1)

Item	Acceptable number		Total
	A	B	
Bright	0	2	5
Dark	2	4	
Total	2	4	

Non-uniformity: Visible through 6%ND filter. (Minor)

Foreign material in Black or White spots shape (W>1/4L)

Zone / Dimension	Acceptable number	Class Of Defects	AQL Level
D> 0.5	0	Minor	1.5
0.1 ≤ D ≤ 0.5	4		
D ≤ 0.1	*		

D = (Long + Short) / 2 ＊: Disregard

Foreign Material in Line or spiral shape (W≤1/4L) (Note: 4)

L (mm) \ Zone W(mm)		Acceptable number	Class Of Defects	AQL Level
L >2	W>0.1	0	Minor	1.5
0.5 < L ≤ 2	0.03 < W≤0.1	1		
L ≤0.5	W≤0.03	*		

L : Length W : Width ＊: Disregard

No. 2 — Parameter: External Inspection (non-operating)

Dimension: Outline (Major)

Bezel appearance: uneven (Minor)

Scratch on the polarize: (Note:2)

L (mm) \ Zone W(mm)		Acceptable number	Class Of Defects	AQL Level
--	W>0.1	0	Minor	1.5
L ≤ 2	W≤0.1	3		

L : Length W : Width ＊: Disregard

Dent or bubble on the polarize (Note:2)

Zone / Dimension	Acceptable number	Class Of Defects	AQL Level
D≤0.05	*	Minor	1.5
D≤0.3	3		

D = (Long + Short) / 2 ＊: Disregard

			Definition
Class of defects	**Major**	AQL 0.65%	It is a defect that is likely to result in failure or to reduce materially the usability of the product for the intended function.
	Minor	AQL 1.5%	It is a defect that will not result in functioning problem with deviation classified.

Note1:

(a) Bright point defect is defined as point defect of R,G,B with area >1/2 pixel respectively

(b) Dark point defect is defined as visible in full white pattern.

(c) Definition of distribution of point defect is as follows:

- Minimum separation between dark point defects should be larger than 5mm.
- Minimum separation between bright point defects should be larger than 5mm.

(d) Definition of joined bright point defect and joined dark point defect are as follows:

- Two or more joined bright point defects must be nil.
- Three joined dark point defects must be nil.
- Coupling of one dark and one bright point in junction is counted as one dark and bright spot with 1 pair maximum.
- Two Joined dark point is counted as two dark points with 2 pair maximum.

Note2: The external inspection should be conducted at the distance 30 ± 5cm between the eyes of inspector and the panel.

Note3: Luminance measurement for contrast ratio is at the distance 50± 5cm between the detective head and the panel with ambient luminance less than 1 lux. Contrast ratio is obtained at optimum view angle.

Note4: W-Width in mm , L-length of Max. (L1, L2) in mm.

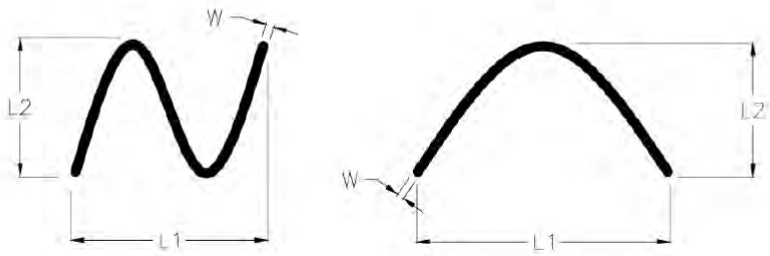

Unless otherwise agree in written, the sampling inspection shall be applied to the incoming inspection of customer.
Lot size: Quantity of shipment lot per model.
Sampling type: normal inspection, single sampling
Sampling table: MIL-STD-105E
Inspection level: Level II

The LCD shall be inspected under 40W white fluorescent light.
$\theta \leq 45^{\circ}$ inspection under non-operating condition.
$\theta \leq 5^{\circ}$ inspection under operating condition

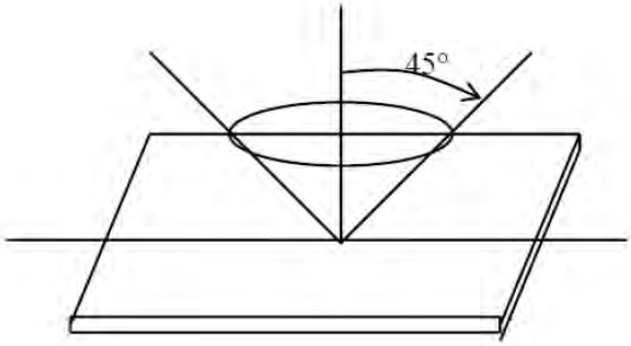

Definition of applicable Zones

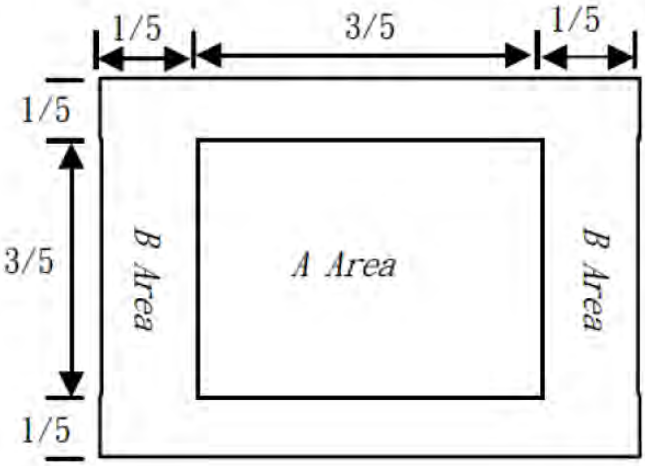

Safety

If the LCD panel breaks , be careful not to get the liquid crystal to touch your skin.
If the liquid crystal touches your skin or clothes , please wash it off immediately by using soap and water.

Handling

Avoid any strong mechanical shock which can break the glass.
Avoid static electricity which can damage the CMOS LSI—When working with the module, be sure to ground your body and any electrical equipment you may be using.
Do not remove the panel or frame from the module.
The polarizing plate of the display is very fragile. So , please handle it very carefully, Do not touch, push or rub the exposed polarizing with anything harder than an HB pencil lead (glass , tweezers , etc.)
Do not wipe the polarizing plate with a dry cloth, as it may easily scratch the surface of plate.
Do not touch the display area with bare hands , this will stain the display area.
Do not use ketonics solvent & aromatic solvent. Use with a soft cloth soaked with a cleaning naphtha solvent.
To control temperature and time of soldering is 280 ± 10°C and 3 ~ 5 sec.
To avoid liquid (include organic solvent) stained on LCM.

Storage

Store the panel or module in a dark place where the temperature is 25°C ± 5°C and the humidity is below 65% RH.
Do not place the module near organics solvents or corrosive gases.
Do not crush, shake, or jolt the module.